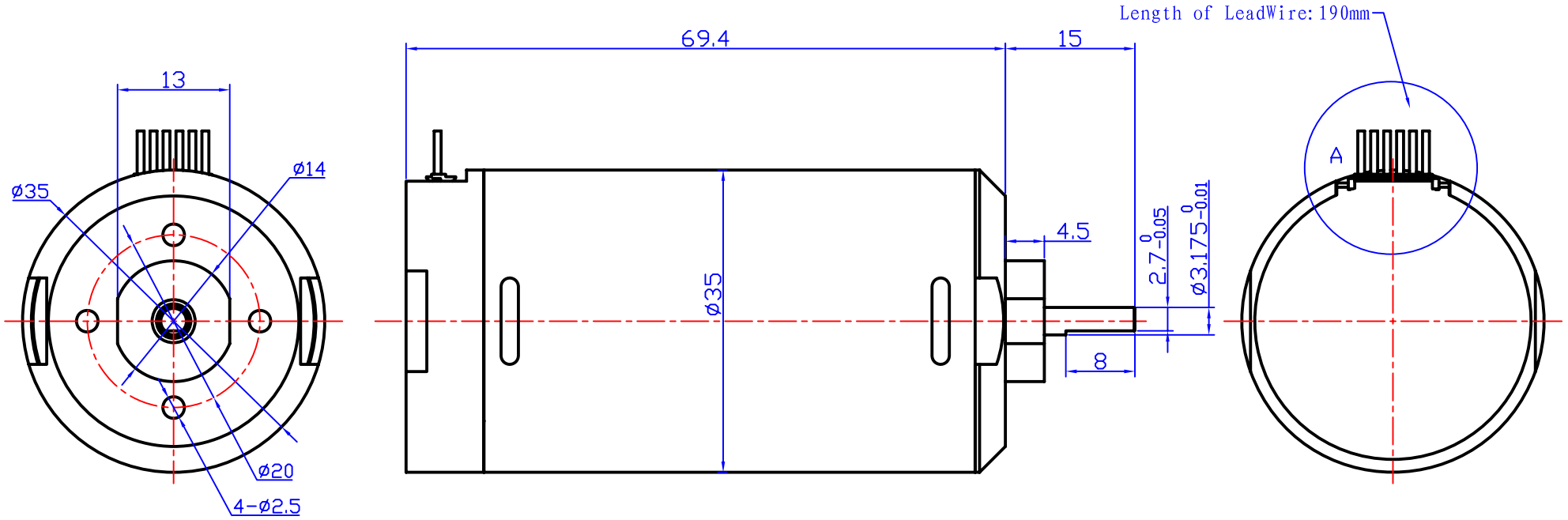

Technical requirements

1. Data of Motor:
   - Turning of Motor: CW
   - Voltage: 24VDC
   - No-load speed: 5000 ± 10%rpm
   - No-load current: ⩽ 0.4A
   - Rated torque: 54mN.m
   - Rated speed: 4000 ± 10%rpm
   - Rated current: 1.4A
2. Unlabeled dimensional tolerances is based on GB1804-m;
3. V MAX: 600VAC, 2mA, 1S;
4. Insulation resistance between winding wire and motor shaft: >200MΩ;
5. Motor rotating flexible, no abnormal noise。

Connection manner:

Pin1.(Red) MOTOR+
Pin2.(Brown) Encoder+
Pin3.(Green) CH A
Pin4.(White) Encoder-
Pin5.(Yellow) CH B
Pin6.(Black) MOTOR-

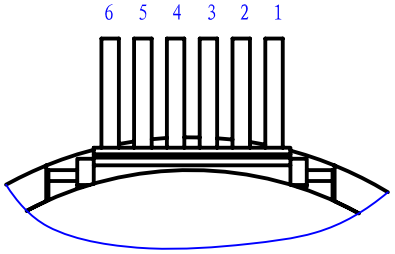

Enlarged view of A
Scale 4: 1

Data of Encoder:
- Voltage: 5 ~ 24 VDC
- PPR: 2
- Channel: 2

CW

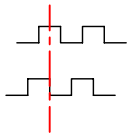

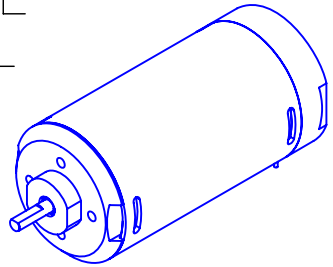

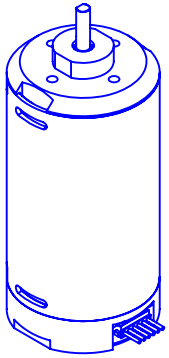

					MR3535-24		图 号	MR3535.0 WX
					NAME	Permanent magnetic DC Motor	代 号	第 1 页
							件 数	共 1 页
标记	处数	更改单号	签字	日期	材 料		比 例	2:1
设 计			标准化					
审 核			审 批					
工 艺			日 期					

WUXI MCROT MOTOR CO., LTD.
www.mcrmotor.com

版本
P1
生效日期
软盘号
档案号
签字
日期